SM-DVN SERIES

ADVANCED 2-PORT DVI-I KVM SWITCH

USER MANUAL

SM-DVN-2S	2-Port Single-Head DVI-I KVM Switch
SM-DVN-2D	2-Port Dual-Head DVI-I KVM Switch

Designed and Manufactured in the USA

Smart-AVI

1-800-284-2131
www.smartavi.com

OVERVIEW

TECHNICAL SPECIFICATIONS_____ 3

WHAT'S IN THE BOX?_____4

FRONT AND BACK_____ 4

INSTALLATION_____ 5-6

SYSTEM OPERATION_____ 7

FRONT PANEL CONTROL_____ 7

HOTKEY AND RS232 SERIAL CONTROL_____ 7

CUSTOM HOTKEY TRIGGERS_____ 8

LED'S BEHAVIOUR_____ 9

TROUBLESHOOTING_____ 10

TECHNICAL SUPPORT_____ 10

LIMITED WARRANTY STATEMENT_____ 11

TECHNICAL SPECIFICATIONS

VIDEO		
Format	DVI Dual Link, DVI Single-Link, VGA	
Maximum Pixel Clock	165 MHz	
Input Interface	SM-DVN-2S	(2) DVI-I 29-pin
	SM-DVN-2D	(4) DVI-I 29-pin
Output Interface	SM-DVN-2S	(1) DVI-I 29-pin
	SM-DVN-2D	(2) DVI-I 29-pin
Resolution	DVI Dual-Link: 2560 x 1600, DVI Single-Link: 1920 x 1200, VGA: 1920 x 1080	
Color Mode	24-bit	
DDC	5 volts p-p (TTL)	
Input Equalization	Automatic	
Input Cable Length	Up to 20 ft	
Output Cable Length	Up to 20 ft	
Data Rate	1.65 Gbps per color	
Console Monitors	Supports both digital and analog monitors	
AUDIO		
Input Interface	(2) 3.5 mm Stereo Audio	
Output Interface	(1) 3.5 mm Stereo Audio	
Impedance	600 Ohm	
Frequency Response	20 Hz to 20 kHz	
Nominal Level	0-1.0 V	
Common Mode	Rejection at 60 dB	
USB		
Signal Type	USB 2.0, 1.1, and 1.0 w/ internal hub	
Input Interface	(2) USB Type B (female)	
Output Interface	(2) USB Type A (female) for K/M emulation; (2) for USB 2.0 Transparent	
CONTROL		
Front Panel	Push Buttons with LED Indicators	
RS-232	DB9 Female - 115200 N,8,1, No flow control	
Hot Keys	Via Keyboard	
OTHER		
Power Adapter	External 100-240 VAC/12VDC2A @ 24W	
Dimensions	8.8” W x 2.63” H x 6.69” D	
Weight	3.85 lbs	
Approvals	UL, CE, ROHS Compliant	
Operating Temperature	+32 to +104°F (0 to +40°C)	
Storage Temperature	-4 to 140°F (-20 to +60°C)	
Humidity	Up to 80% (No Condensation)	
Emulation	Keyboard and Mouse	

WHAT'S IN THE BOX?

PART NO.	Q-TY	DESCRIPTION
SM-DVN Unit	1	2-Port DVI-I Dual Link KVM Switch with Audio and USB 2.0 Support
PS5VDC2A	1	Power Adapter
	1	User Manual

FRONT AND BACK

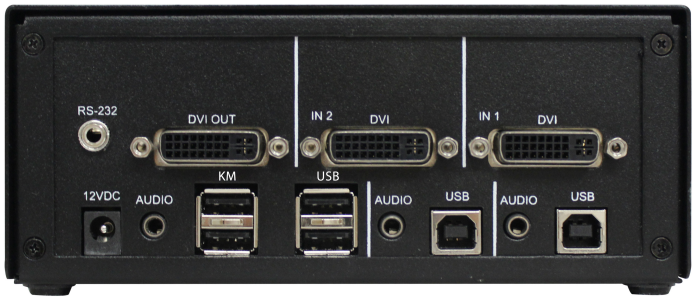

SM-DVN-2S Back

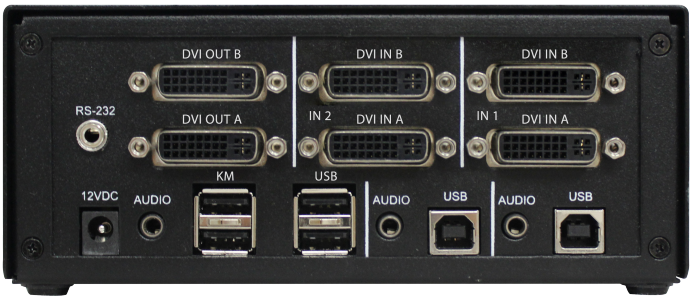

SM-DVN-2D Back

SM-DVN-2S Front

SM-DVN-2D Front

INSTALLATION

1. Ensure that power is turned off or disconnected from the unit and the computers.
2. Use a DVI cable to connect the DVI output port from each computer to the corresponding DVI-I IN ports of the unit.
3. Use a USB cable (Type-A to Type-B) to connect a USB port on each computer to the respective USB ports of the unit.
4. Optionally connect a stereo audio cable (3.5mm to 3.5mm) to connect the audio output of the computers to the AUDIO IN ports of the unit.
5. Connect a monitor to the DVI-I OUT console port of the unit using a DVI cable.
6. Connect a USB keyboard and mouse in the two USB console ports.
7. Optionally connect stereo speakers to the AUDIO OUT port of the unit.
8. Finally, power on the KVM by connecting a 12VDC power supply to the power connector, and then turn on all the computers.

Note: You can connect up to 2 computers to the 2 port KVM.

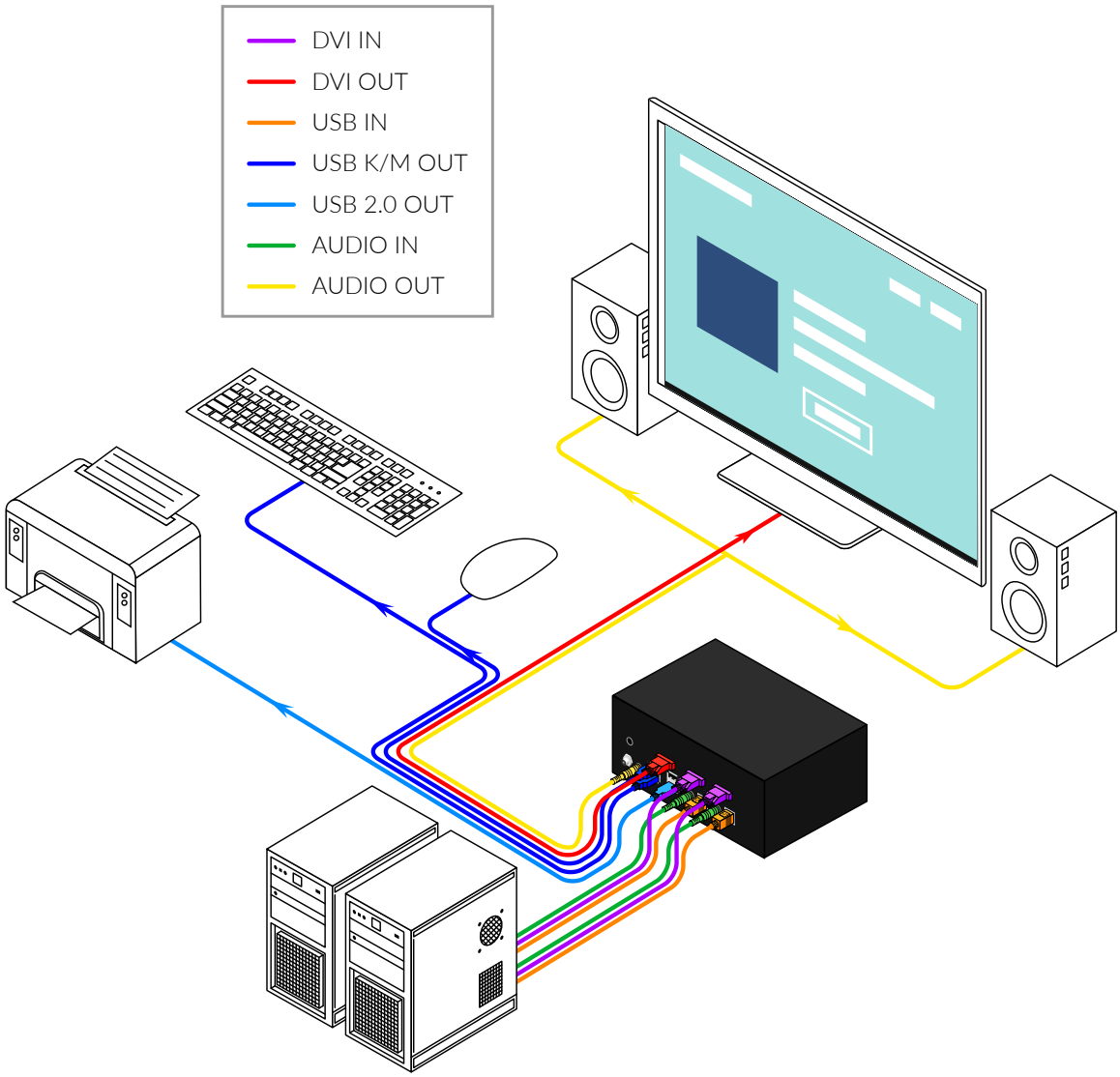

INSTALLATION (CONTINUED)

EDID LEARN

The KVM is designed to learn the connected monitor's EDID upon power up. In the event of connecting a new monitor to the KVM, a power recycle is required.

The KVM will indicate to the user the EDID learn process by flashing the front panel's LEDs. Port one green and push button blue LEDs will both begin to flash for about 10 seconds. When the LEDs stop flashing, the EDID learn process is done.

If the KVM has more than one video board (such as dual-head and quad-head models), then the unit will continue to learn the EDIDs of the connected monitors and indicate the progress of the process by flashing the next port selection green and push button blue LEDs respectively.

The monitor must be connected to the video output connector located in the console space at the back of the KVM during the EDID learn process.

If the read EDID from the connected monitor is identical to the current stored EDID in the KVM then the EDID learn function will be skipped.

SYSTEM OPERATION

There are three ways to control the SM-DVN: Keyboard Hotkeys, RS-232 Serial Commands, and Front Panel Buttons. All modes of control will allow the user the set their desired configurations.

FRONT PANEL CONTROL

To switch to an input port, simply push the button on the front-panel of the KVM. If an input port is selected, the LED of that port will turn on.
Hold down the button of Front Panel for 3 seconds to force learn EDID.

HOTKEY AND RS232 SERIAL CONTROL

The SM-DVN may also be controlled via RS-232 commands. To use these commands, you must use HyperTerminal or an alternate terminal application. The settings for the connection are as follows: Baudrate **115200**; Data Bits **8**; Parity **None**; Stop Bits **1**; Flow Control **None**.
Once you have connected to the SM-DVN via Serial, you will see the SM-DVN information when the device starts up.

The following commands can be used for RS-232 with available keyboard hotkeys:

COMMAND DESCRIPTION	HOTKEY	RS-232 COMMAND
Switch all USB devices and Main video	[CTRL][CTRL] [port #] [ENTER]	//**m** [port #] [ENTER]
Switch Audio Only	[CTRL][CTRL] **a** [port #] [ENTER]	//**a** [port #] [ENTER]
Switch KM Only	[CTRL][CTRL] **c** [port #] [ENTER]	//**c** [port #] [ENTER]
Switch USB Only	[CTRL][CTRL] **u** [port #] [ENTER]	//**u** [port #] [ENTER]
Learn EDID	[CTRL][CTRL] **e** [ENTER]	//**e** [ENTER]
Trigger Hotplug	[CTRL][CTRL] **h** [ENTER]	//**h** [ENTER]
Reset Software	[CTRL][CTRL] **r** [ENTER]	//**r** [ENTER]
Factory Defaults	[CTRL][CTRL] **f** [ENTER]	//**f** [ENTER]
Same as front panel ◄ M1 button	[HK][HK] ▲	//?? [ENTER]
Same as front panel M2 ► button	[HK][HK] ▼	//?? [ENTER]
Get Port Status	N/A	//**??** [ENTER]

CUSTOM HOTKEY TRIGGERS

Users are able to customize the keys that trigger Hotkeys. The default trigger for hot key function on the keyboard is **Ctrl + Ctrl**. The trigger function can be used to change to the following keys:

Ctrl (Left / Right), **Alt**, **Shift** (Left / Right), **Caps Lock**, **Scroll Lock**, **F1-F12**

TO VIEW HOTKEY TRIGGER SETTING
Use the RS-232 command: **/** + **/** + **?** + **?** + **Enter** to view the current HotKey Trigger To reset the Hotkey Trigger use the "Factory Defaults" command.

TO CHANGE THE HOTKEY TRIGGER SETTING
HotKey + **HotKey** + **x** + [desired hotkey]

Example: If users current Hotkey trigger is **Shift** and want to change to **Scroll Lock**, user would type **Shift** + **Shift** + **x** + **Scroll Lock**

LED'S BEHAVIOR

User Console Interface – Display LED:

#	STATUS	DESCRIPTION
1	Off	Monitor is not connected
2	On	Monitor is connected
3	Flashing	EDID problem – Learn EDID to fix the problem

Front Panel – Port Selection LED's:

#	STATUS	DESCRIPTION
1	Off	Non-selected port
2	On	Selected port
3	Flashing	EDID learn in process

IMPORTANT!

If all Front Panel LED's are **on** and **not flashing**, the POWER UP SELF TEST has failed and all functions are disabled. Check if any of the front panel port selection buttons are jammed. In this case, release the jammed button and recycle the power. If power up self test is still failing, please contact SmartAVI technical support at support@smartavi.com.

EDID Learn - Front Panel LED's:
All LED's are turned on for 1 second. Then:

- Port 1 LED's will flash until the end of the process.
- Port 2 LED's will flash until the end of the process if a second video board exists (Dual-head KVM)

TROUBLESHOOTING

No Power

- Make sure that the power adapter is securely connected to the power connector of the unit.
- Check the output voltage of the power supply and make sure that the voltage value is around 12VDC.
- Replace the power supply.

No Video

- Check if all the video cables are connected properly.
- Connect the computer directly to the monitor to verify that your monitor and computer are functioning properly.
- Restart the computers.

Keyboard is not working

- Check if the keyboard is properly connected to the unit.
- Check if the USB cables connecting the unit and the computers are properly connected.
- Try connecting the USB on the computer to a different port.
- Make sure that the keyboard works when directly connected to the computer.
- Replace the keyboard.

Mouse is not working

- Check if the mouse is properly connected to the unit.
- Try connecting the USB on the computer to a different port.
- Make sure that the mouse works when directly connected to the computer.
- Replace the mouse.

No Audio

- Check if all the audio cables are connected properly.
- Connect the speakers directly to the computer to verify that the speakers and the computer audio are functioning properly.
- Check the audio settings of the computer and verify that the audio output is through the speakers.

TECHNICAL SUPPORT

For product inquiries, warranty questions, or technical questions, please contact info@smartavi.com.

LIMITED WARRANTY STATEMENT

A. Extent of limited warranty
SmartAVI, Inc. warrants to the end-user customers that the SmartAVI product specified above will be free from defects in materials and workmanship for the duration of 1 year, which duration begins on the date of purchase by the customer. Customer is responsible for maintaining proof of date of purchase.

SmartAVI limited warranty covers only those defects which arise as a result of normal use of the product, and do not apply to any:

a. Improper or inadequate maintenance or modifications
b. Operations outside product specifications
c. Mechanical abuse and exposure to severe conditions

If SmartAVI receives, during applicable warranty period, a notice of defect, SmartAVI will at its discretion replace or repair defective product. If SmartAVI is unable to replace or repair defective product covered by the SmartAVI warranty within reasonable period of time, SmartAVI shall refund the cost of the product.

SmartAVI shall have no obligation to repair, replace or refund unit until customer returns defective product to SmartAVI.

Any replacement product could be new or like new, provided that it has functionality at least equal to that of the product being replaced.

SmartAVI limited warranty is valid in any country where the covered product is distributed by SmartAVI.

B. Limitations of warranty
To the extant allowed by local law, neither SmartAVI nor its third party suppliers make any other warranty or condition of any kind whether expressed or implied with respect to the SmartAVI product, and specifically disclaim implied warranties or conditions of merchantability, satisfactory quality, and fitness for a particular purpose.

C. Limitations of liability
To the extent allowed by local law the remedies provided in this warranty statement are the customers sole and exclusive remedies.

To the extant allowed by local law, except for the obligations specifically set forth in this warranty statement, in no event will SmartAVI or its third party suppliers be liable for direct, indirect, special, incidental, or consequential damages whether based on contract, tort or any other legal theory and whether advised of the possibility of such damages.

D. Local law
To the extent that this warranty statement is inconsistent with local law, this warranty statement shall be considered modified to be consistent with such law.

Smart-AVI
SMART AUDIO VIDEO INNOVATION

NOTICE

The information contained in this document is subject to change without notice. SmartAVI makes no warranty of any kind with regard to this material, including but not limited to, implied warranties of merchantability and fitness for particular purpose. SmartAVI will not be liable for errors contained herein or for incidental or consequential damages in connection with the furnishing, performance or use of this material. No part of this document may be photocopied, reproduced, or translated into another language without prior written consent from SmartAVI, Inc.

20180109

Designed and Manufactured in the USA

Tel: (800) AVI-2131 • (702) 800-0005
2455 W Cheyenne Ave, Suite 112
North Las Vegas, NV 89032

www.smartavi.com